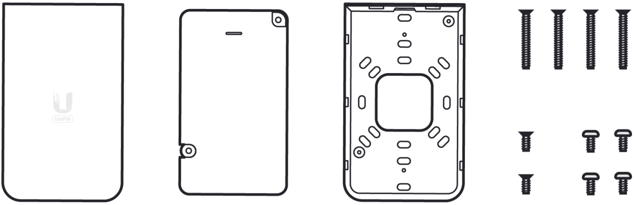

1

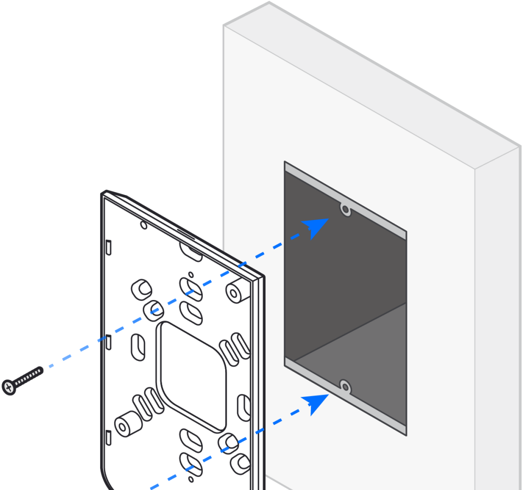

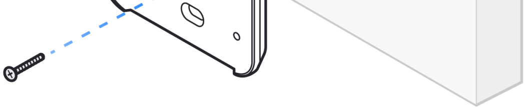

2

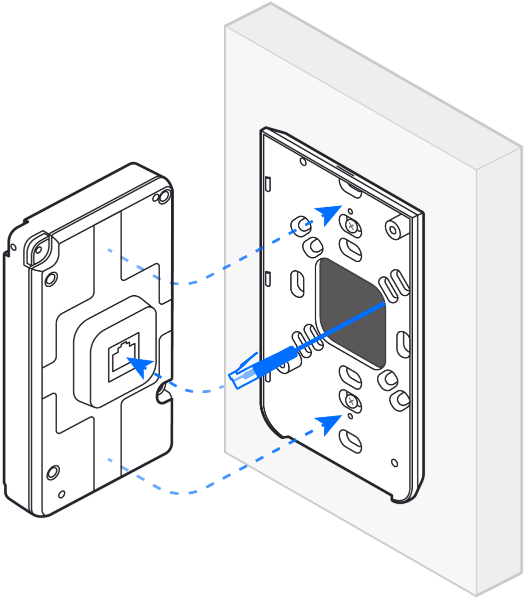

3

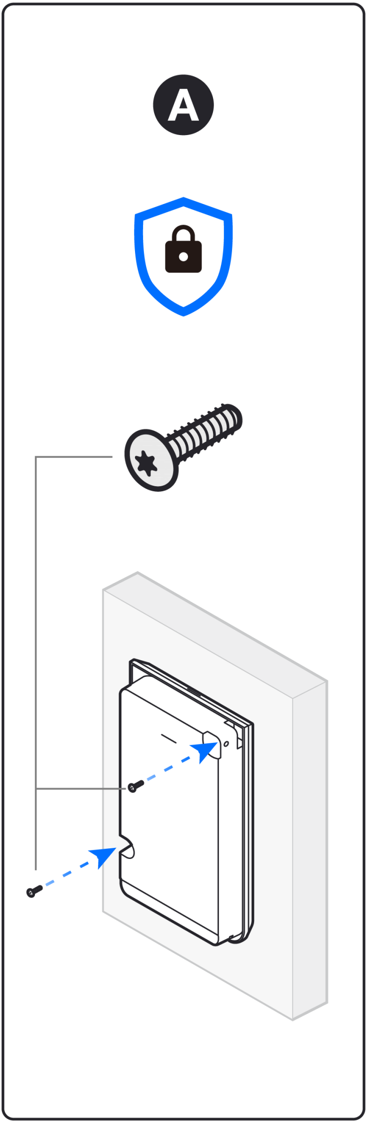

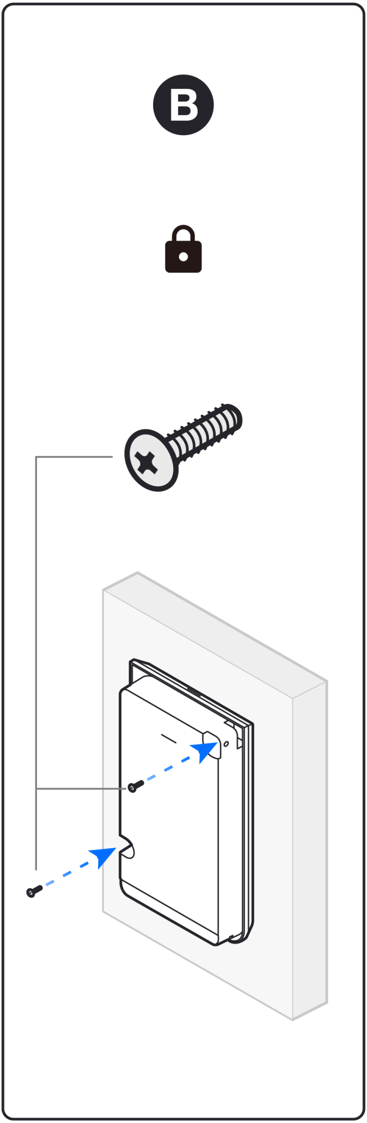

4

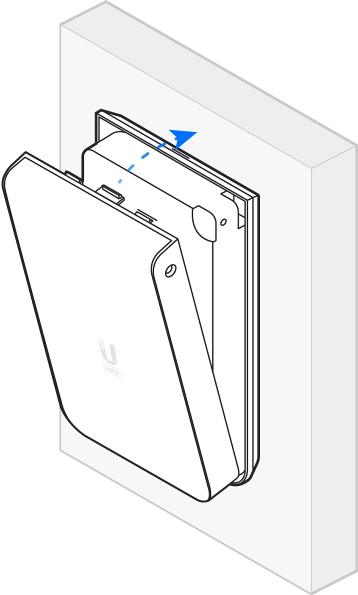

5

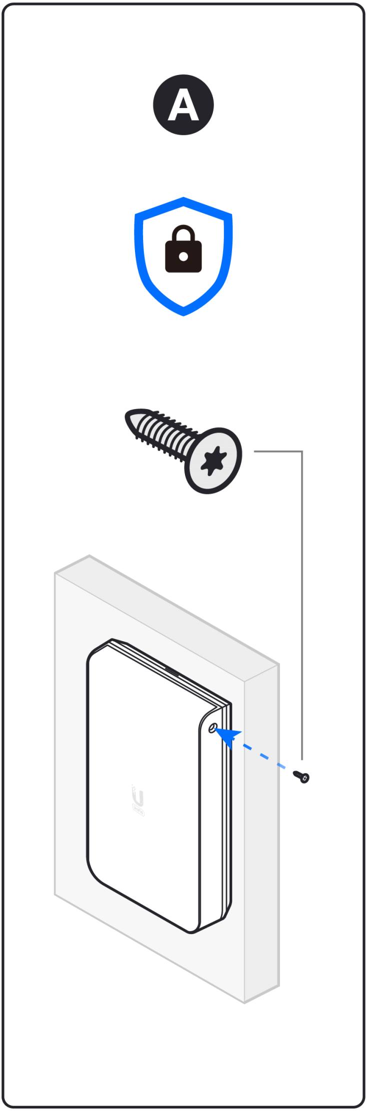

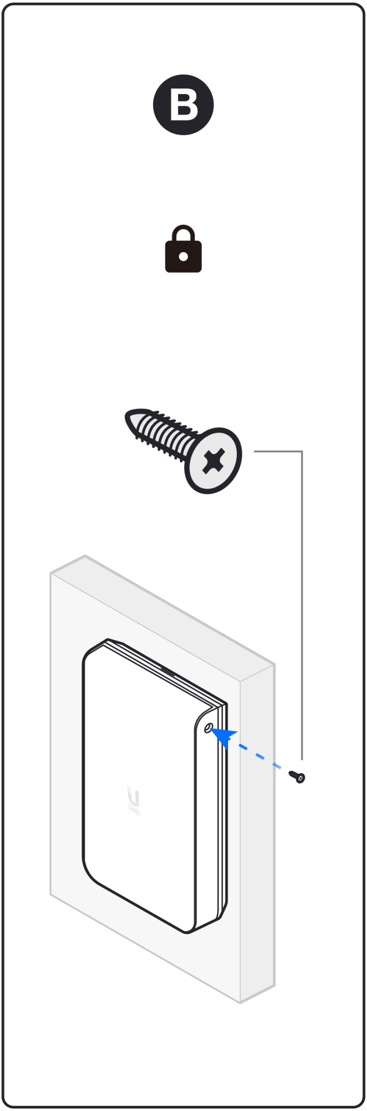

6

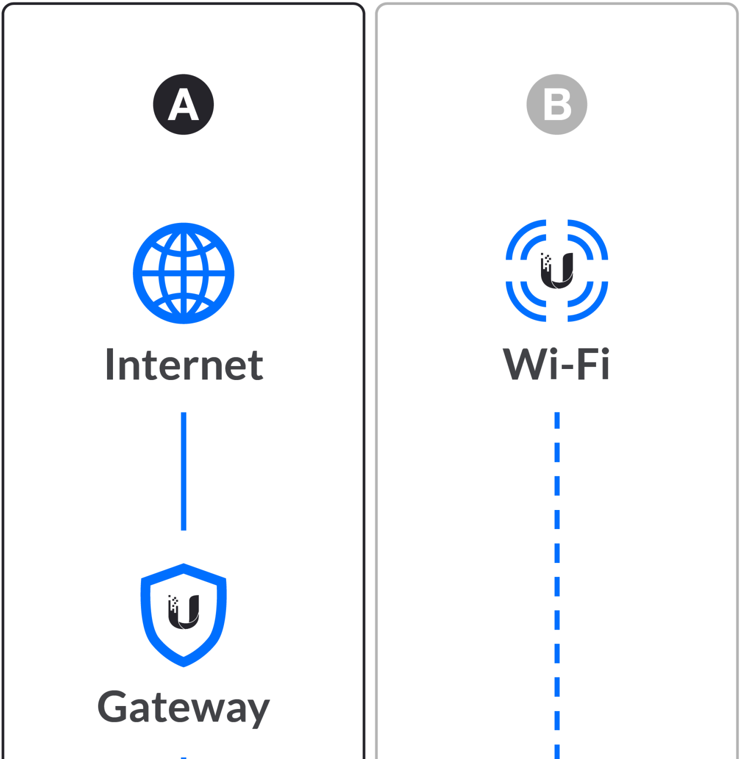
A
Internet
Gateway
B
Wi-Fi

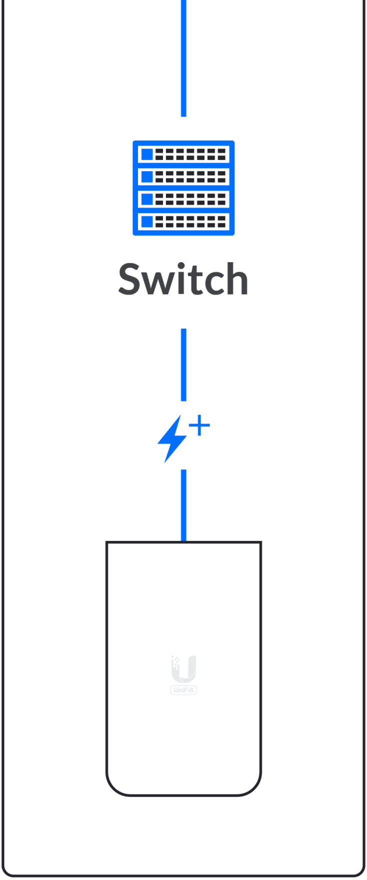
Switch
UniFi6

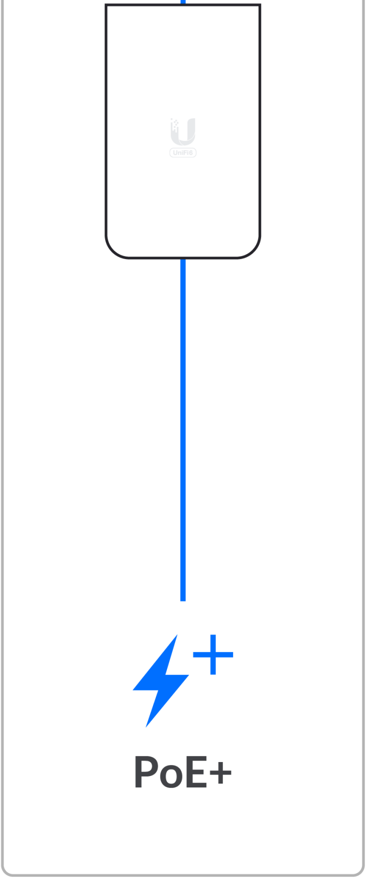

7

Download on the App Store

GET IT ON Google Play

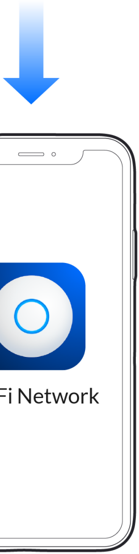
UniFi Network

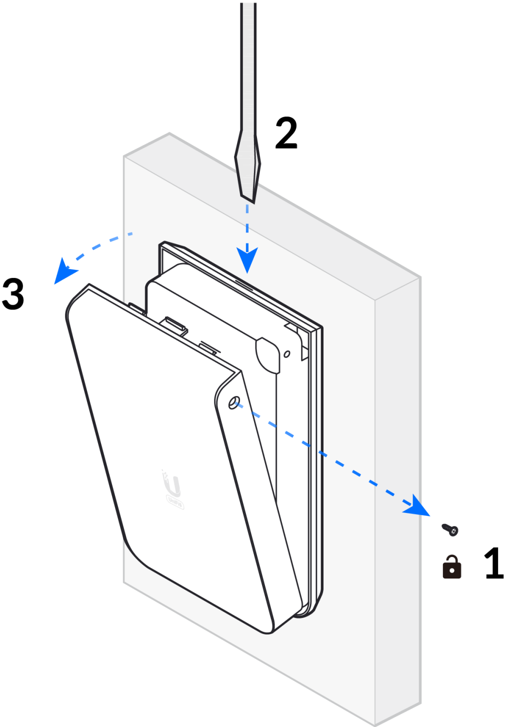

UniFi® 6
In-Wall

Get Answers
community.ui.com