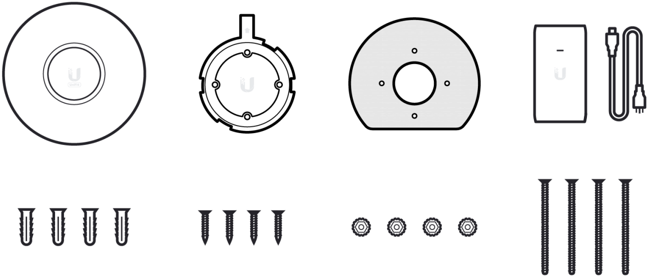

1

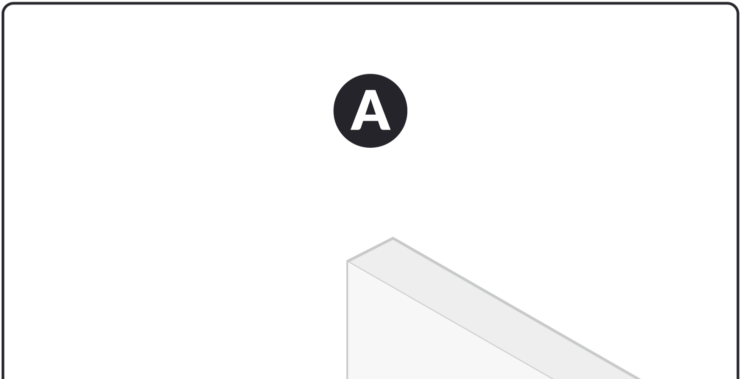

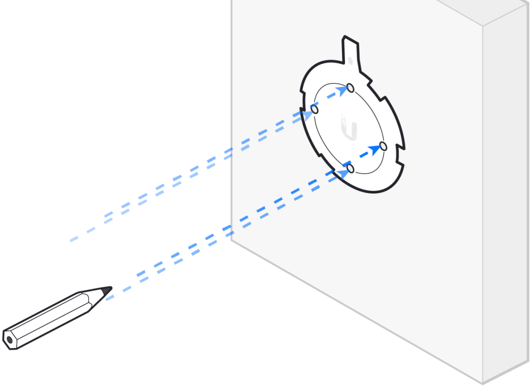

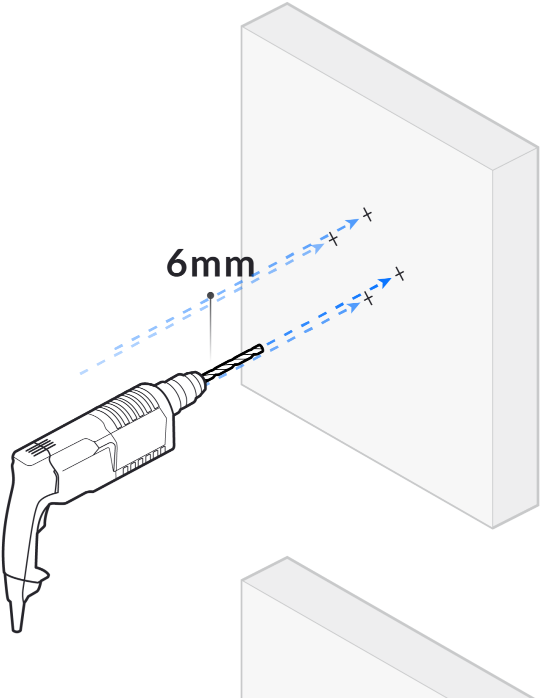

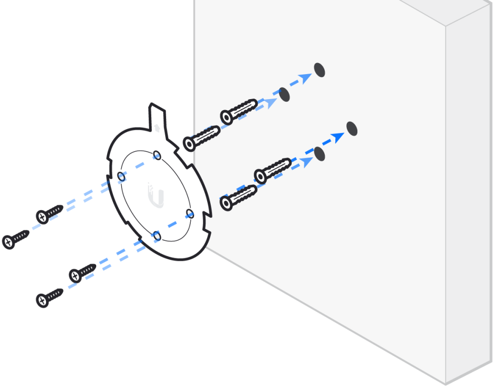

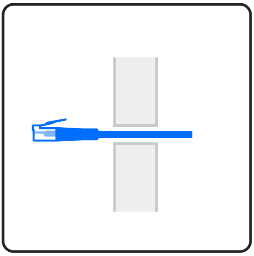

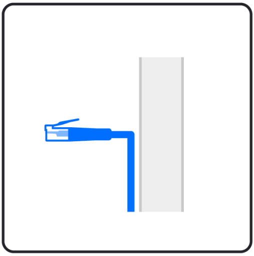

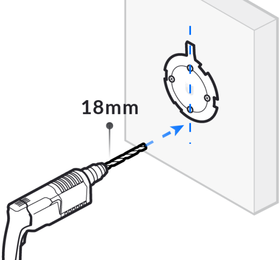

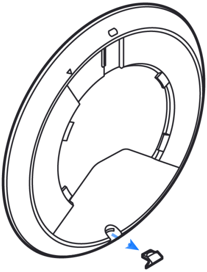

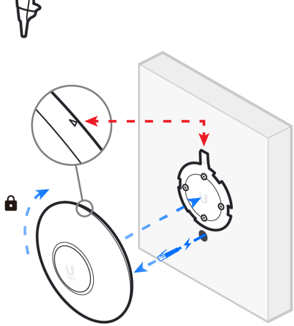

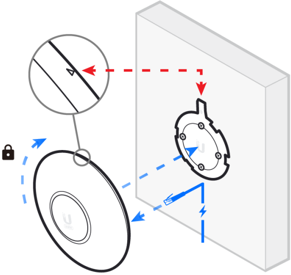

B

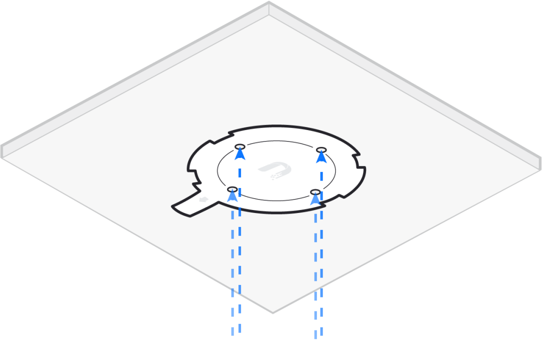

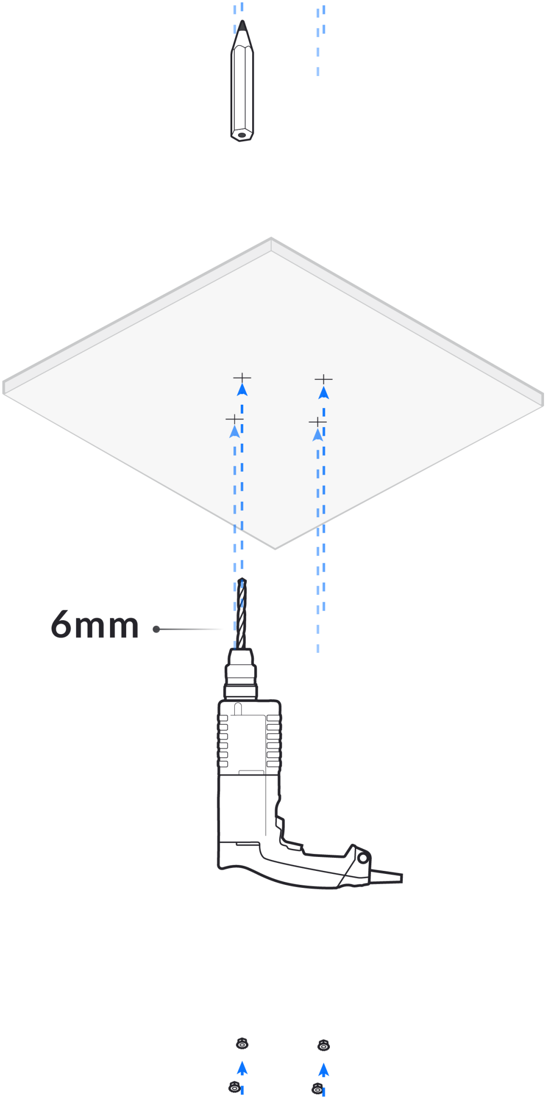

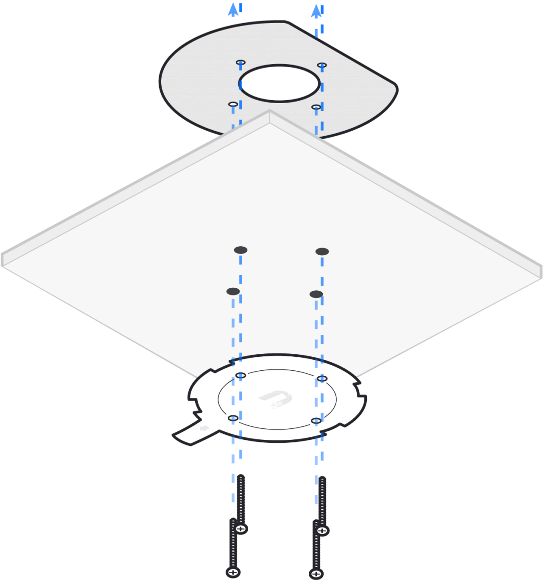

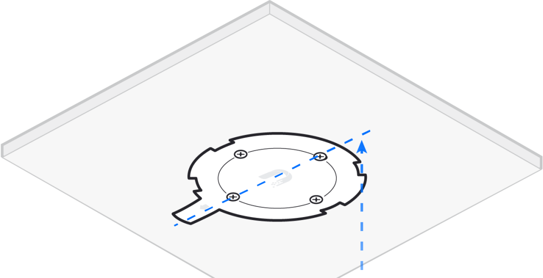

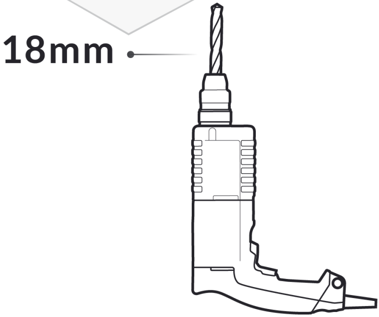

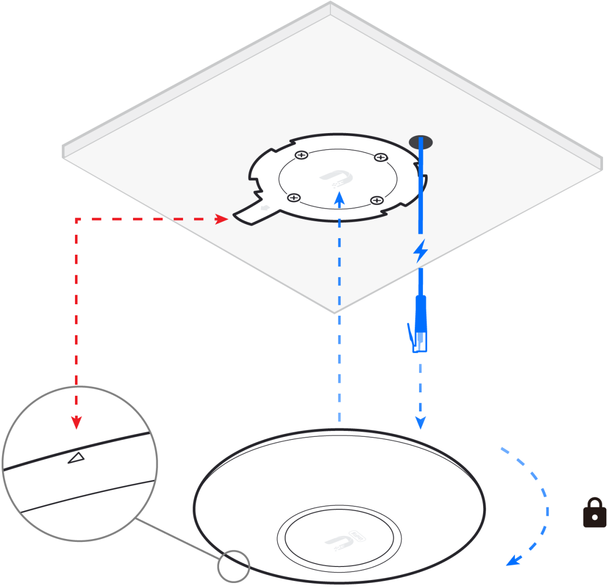

2

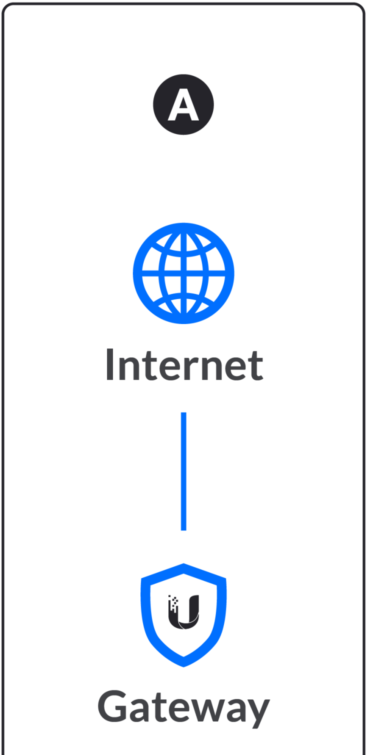
A
Internet
Gateway

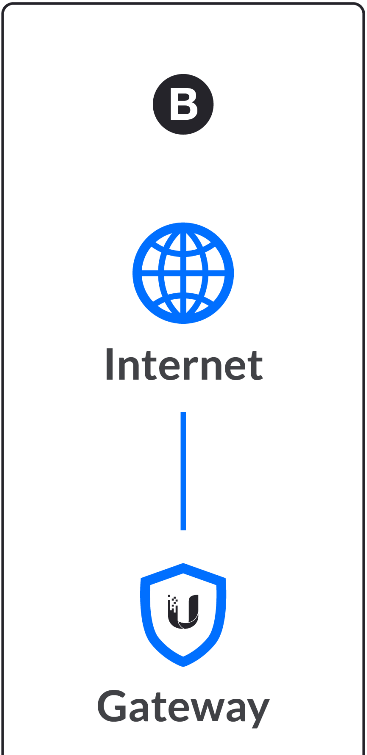
B
Internet
Gateway

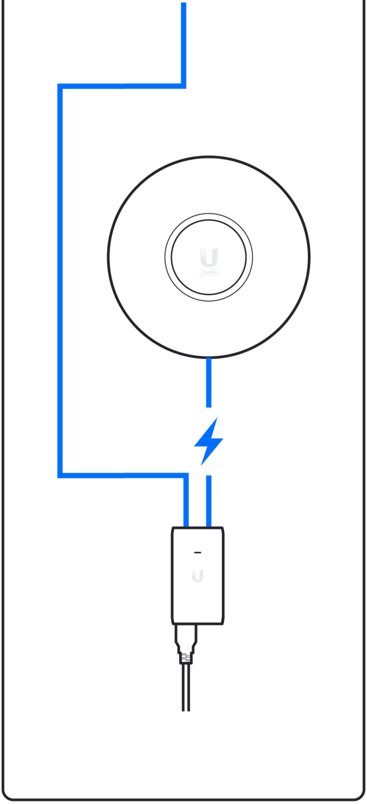

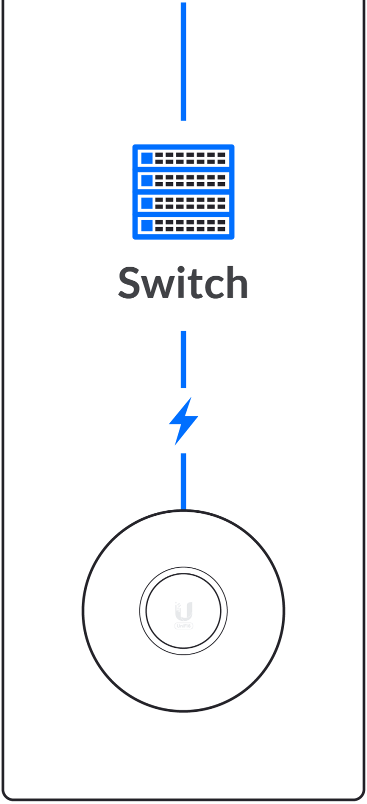

3

Download on the
App Store

GET IT ON Google Play

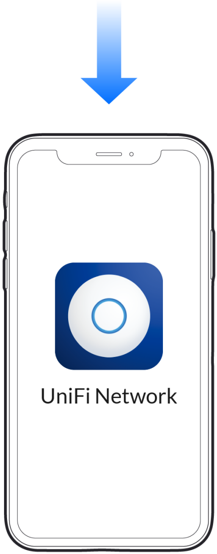
UniFi Network

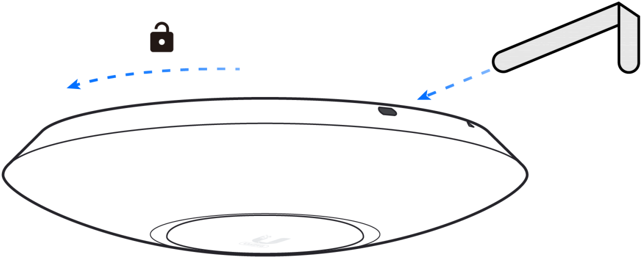

UniFi® 6
Lite

Get Answers
community.ui.com