UISP airFiber 60 XG

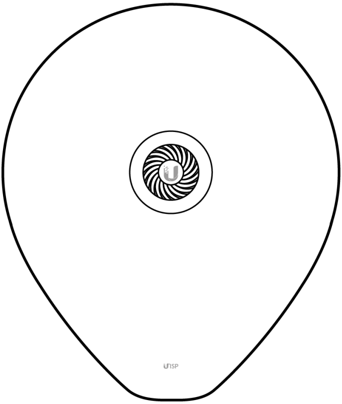

a

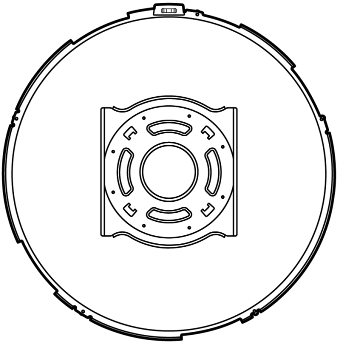

b

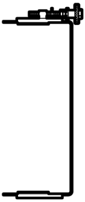

c

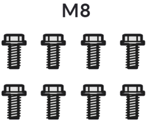

d

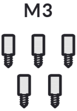

e

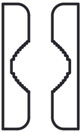

f

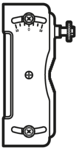

g

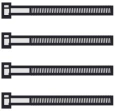

h

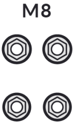

i

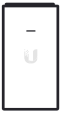

j

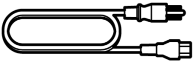

k

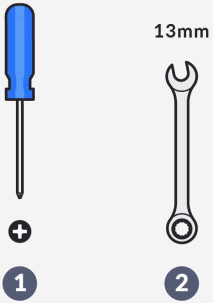

1

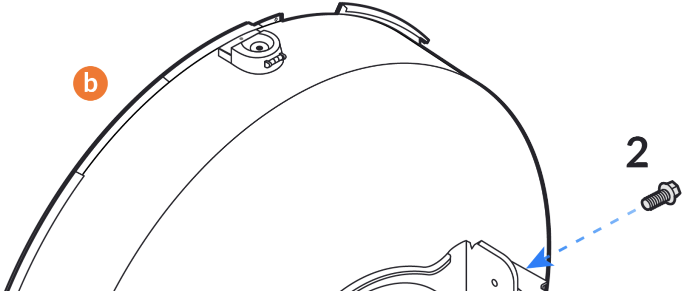

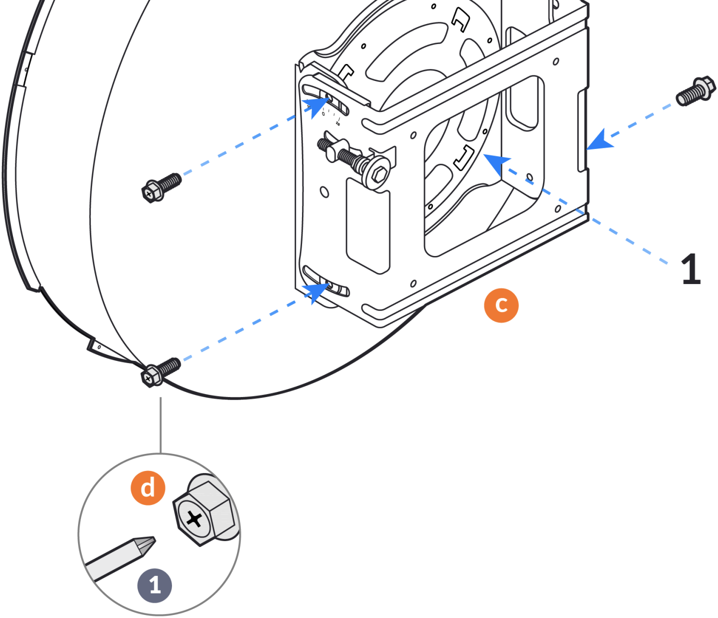

2

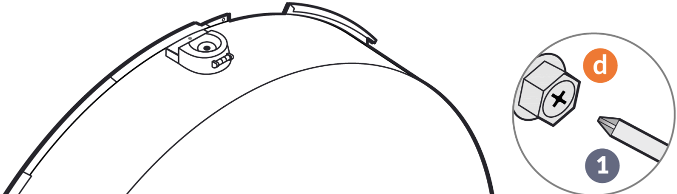

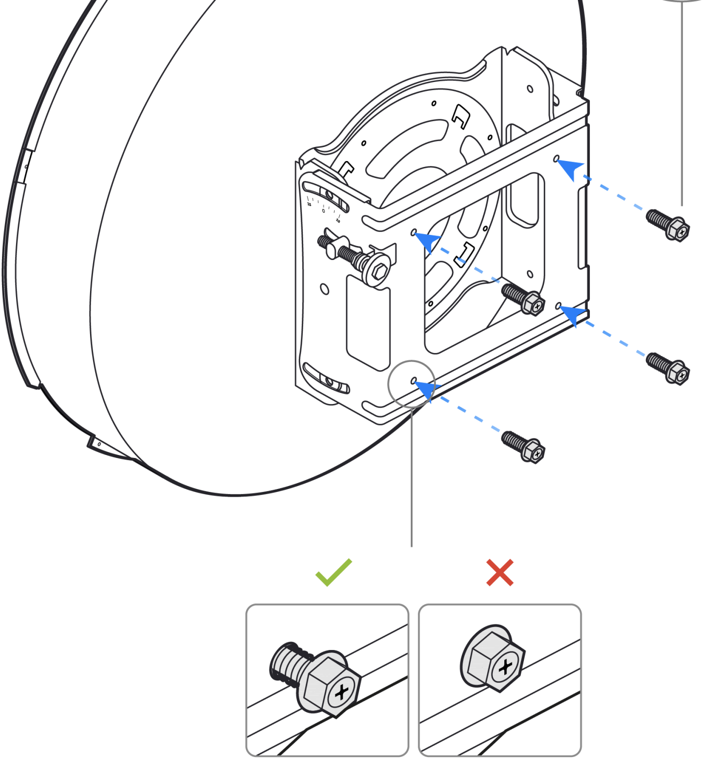

3

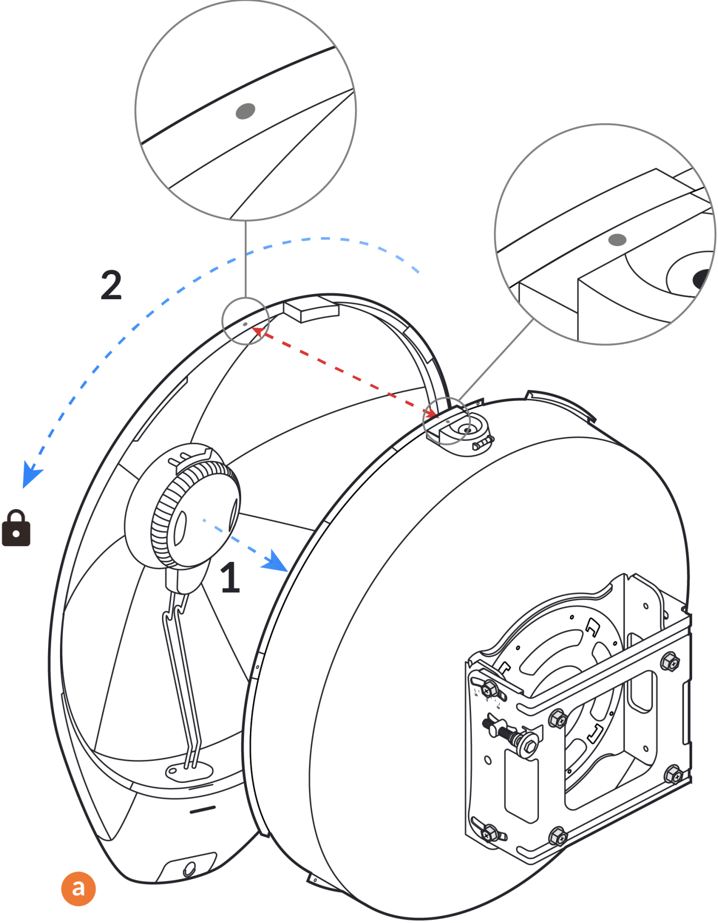

4

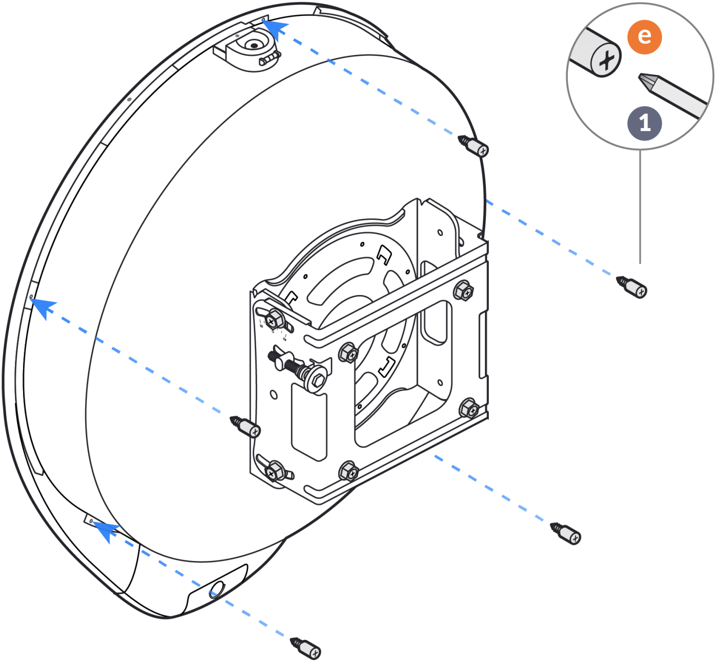

5

40mm<Ø<80mm

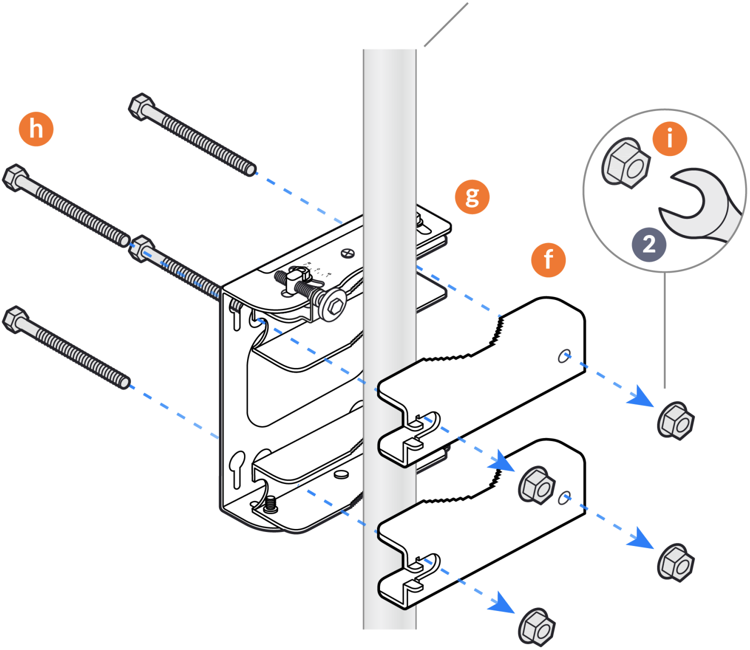

6

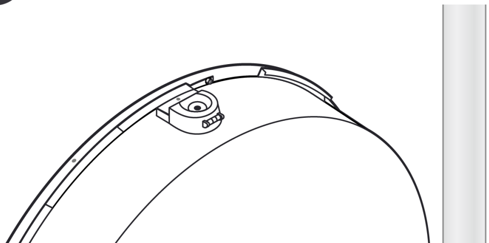

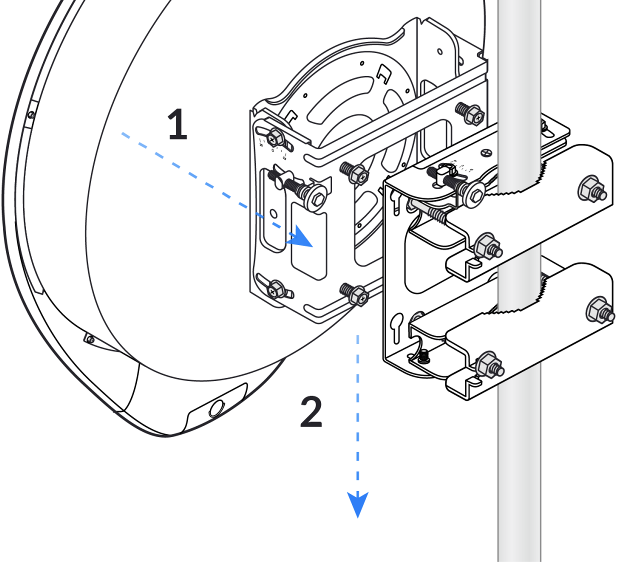

7

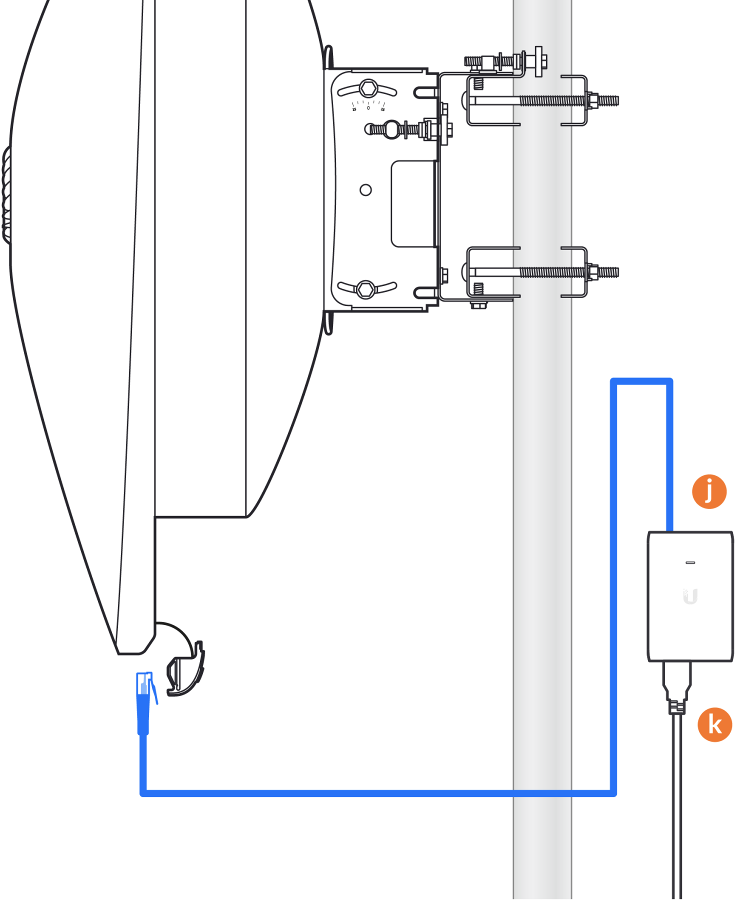

8

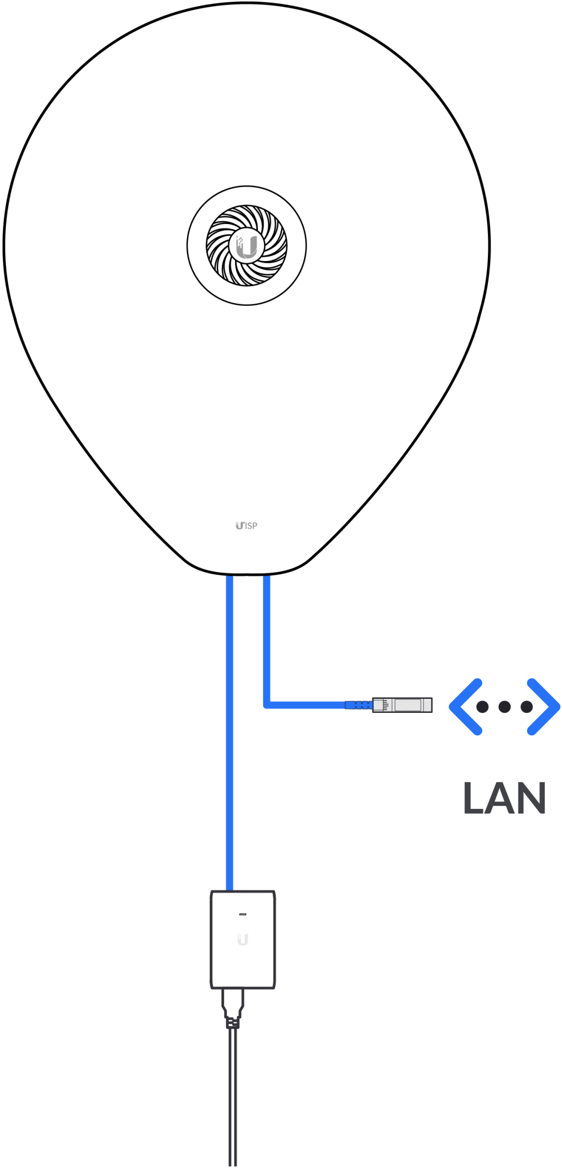

9

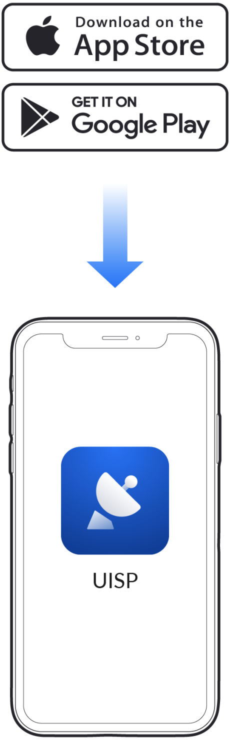
Download on the
App Store
GET IT ON
Google Play
UISP

10

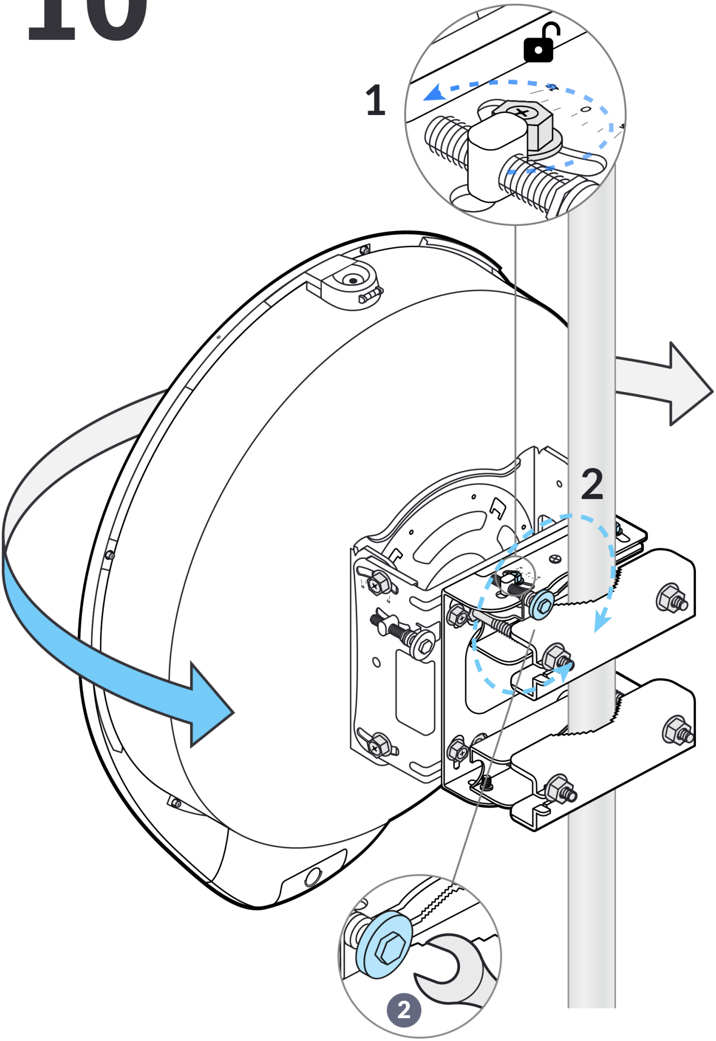

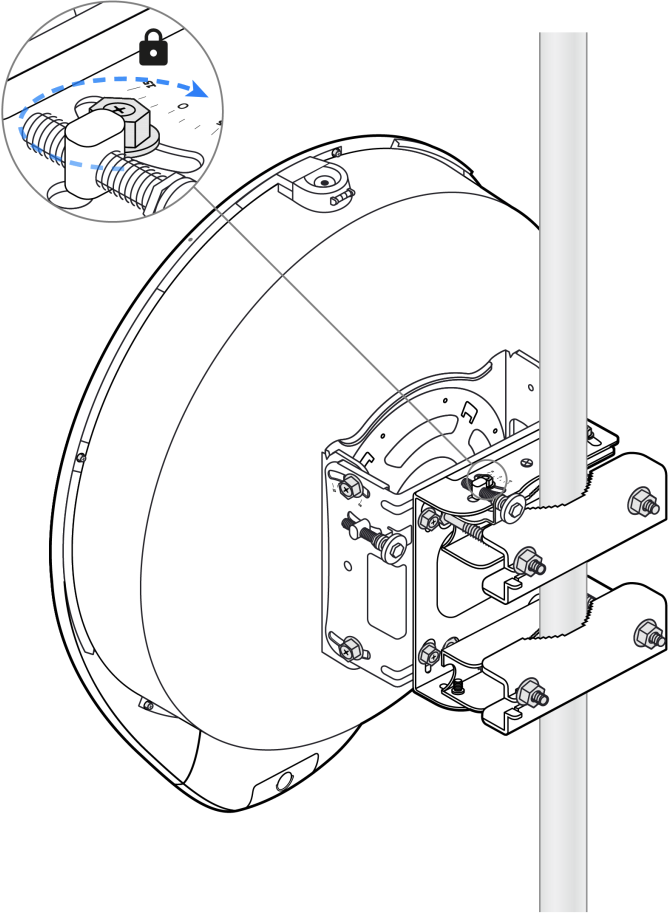

11

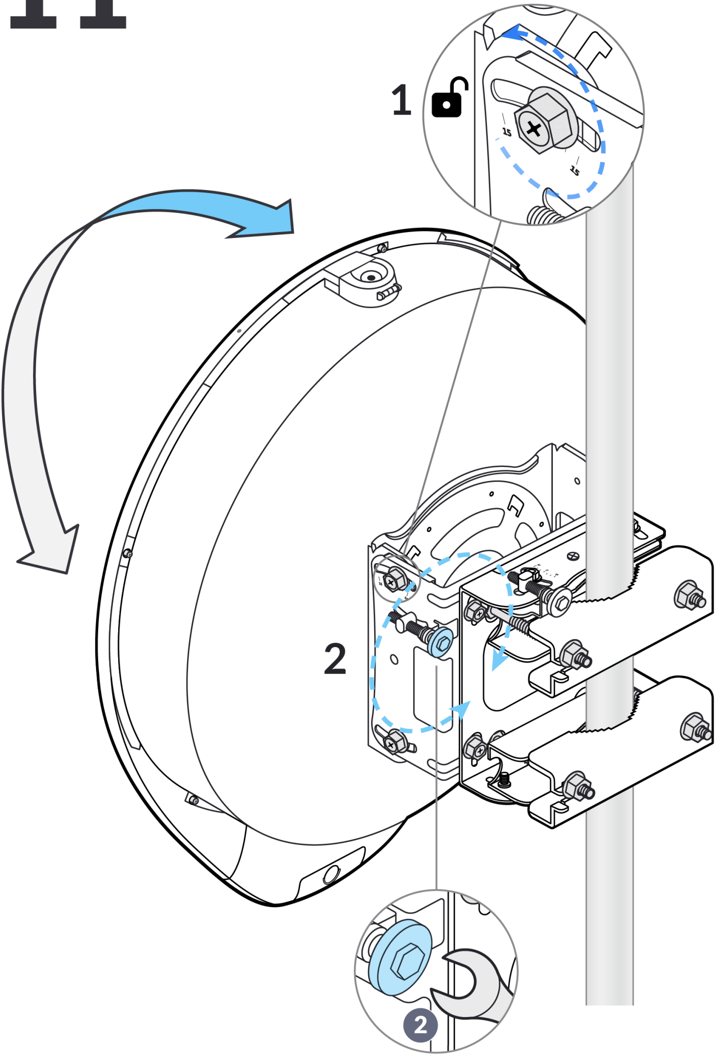

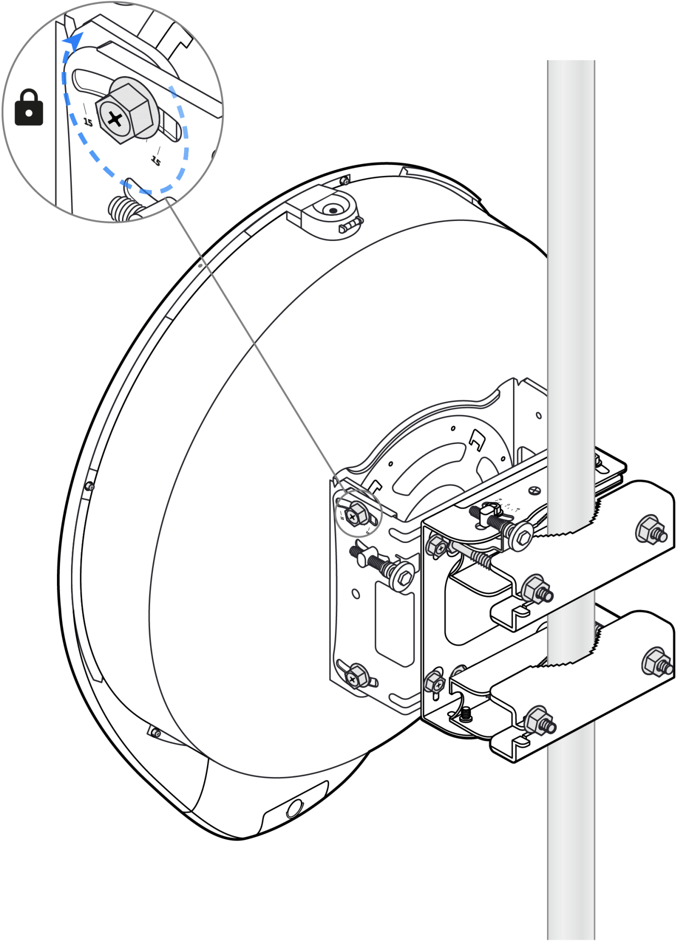

UISP

Get Answers
help.ui.com

UI Support

©2021 Ubiquiti Inc. All rights reserved. Ubiquiti, Ubiquiti Networks, the Ubiquiti U logo, UISP, and airFiber are trademarks or registered trademarks of Ubiquiti Inc. in the United States and in other countries. Apple, the Apple logo, and App Store are trademarks of Apple Inc., registered in the U.S. and other countries. Android, Google, Google Play, the Google Play logo, and other marks are trademarks of Google LLC. All other trademarks are the property of their respective owners.